DATA SHEET

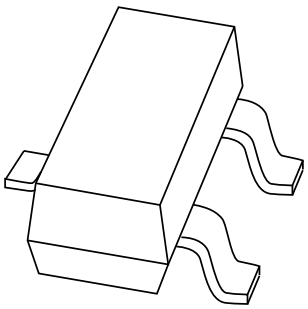

BAP1321-04
Silicon PIN diode

Product specification

2001 Apr 17

Silicon PIN diode BAP1321-04

FEATURES

- High voltage, current controlled
- RF resistor for RF attenuators and switches
- Low diode capacitance
- Low diode forward resistance
- Very low series inductance
- For applications up to 3 GHz.

APPLICATIONS

- RF attenuators and switches.

DESCRIPTION

Two planar PIN diodes in series configuration in a SOT23 small SMD plastic package.

PINNING

PIN	DESCRIPTION
1	anode
2	cathode
3	common connection

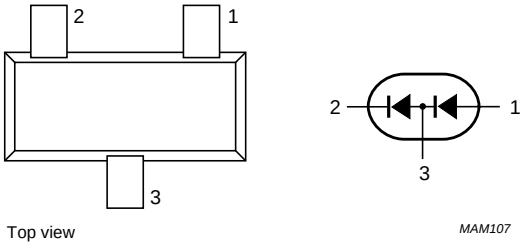

Marking code: 6Fp.

Fig.1 Simplified outline (SOT23) and symbol.

LIMITING VALUES

In accordance with the Absolute Maximum Rating System (IEC 60134).

SYMBOL	PARAMETER	CONDITIONS	MIN.	MAX.	UNIT
Per diode					
V_R	continuous reverse voltage		–	60	V
I_F	continuous forward current		–	100	mA
P_{tot}	total power dissipation	$T_s \leq 90$ °C	–	250	mW
T_{stg}	storage temperature		–65	+150	°C
T_j	junction temperature		–65	+150	°C

ELECTRICAL CHARACTERISTICS

T_j = 25 °C unless otherwise specified.

SYMBOL	PARAMETER	CONDITIONS	TYP.	MAX.	UNIT
Per diode					
V_F	forward voltage	I_F = 50 mA	0.95	1.1	V
I_R	reverse leakage current	V_R = 60 V	–	100	nA
C_d	diode capacitance	V_R = 0; f = 1 MHz	0.42	–	pF
		V_R = 1 V; f = 1 MHz	0.375	0.45	pF
		V_R = 20 V; f = 1 MHz	0.275	0.325	pF
r_D	diode forward resistance	f = 100 MHz; note 1			
		I_F = 0.5 mA	3.4	5.0	Ω
		I_F = 1 mA	2.4	3.6	Ω
		I_F = 10 mA	1.2	1.8	Ω
		I_F = 100 mA	0.85	1.3	Ω
$\|s_{21}\|^2$	isolation	V_R = 0; f = 900 MHz	15.7	–	dB
		V_R = 0; f = 1800 MHz	10.5	–	dB
		V_R = 0; f = 2450 MHz	7.9	–	dB
$\|s_{21}\|^2$	insertion loss	I_F = 0.5 mA; f = 900 MHz	0.27	–	dB
		I_F = 0.5 mA; f = 1800 MHz	0.35	–	dB
		I_F = 0.5 mA; f = 2450 MHz	0.43	–	dB
$\|s_{21}\|^2$	insertion loss	I_F = 1 mA; f = 900 MHz	0.21	–	dB
		I_F = 1 mA; f = 1800 MHz	0.29	–	dB
		I_F = 1 mA; f = 2450 MHz	0.37	–	dB
$\|s_{21}\|^2$	insertion loss	I_F = 10 mA; f = 900 MHz	0.14	–	dB
		I_F = 10 mA; f = 1800 MHz	0.21	–	dB
		I_F = 10 mA; f = 2450 MHz	0.29	–	dB
$\|s_{21}\|^2$	insertion loss	I_F = 100 mA; f = 900 MHz	0.10	–	dB
		I_F = 100 mA; f = 1800 MHz	0.18	–	dB
		I_F = 100 mA; f = 2450 MHz	0.26	–	dB
τ_L	charge carrier life time	when switched from I_F = 10 mA to I_R = 6 mA; R_L = 100 Ω; measured at I_R = 3 mA	0.5	–	μs
L_S	series inductance	I_F = 100 mA; f = 100 MHz	1.4	–	nH

Note

1. Guaranteed on AQL basis: inspection level S4, AQL 1.0.

THERMAL CHARACTERISTICS

SYMBOL	PARAMETER	VALUE	UNIT
$R_{th\ j\text{-}s}$	thermal resistance from junction to soldering point	220	K/W

GRAPHICAL DATA

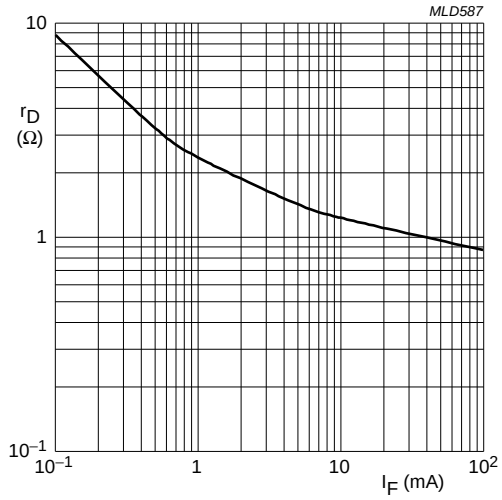

f = 100 MHz; T_j = 25 °C.

Fig.2 Forward resistance as a function of forward current; typical values.

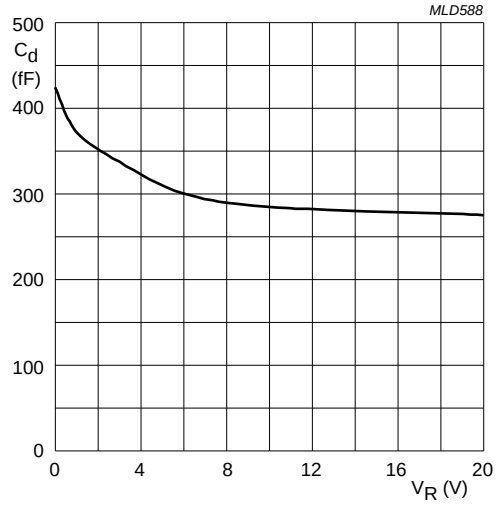

f = 1 MHz; T_j = 25 °C.

Fig.3 Diode capacitance as a function of reverse voltage; typical values.

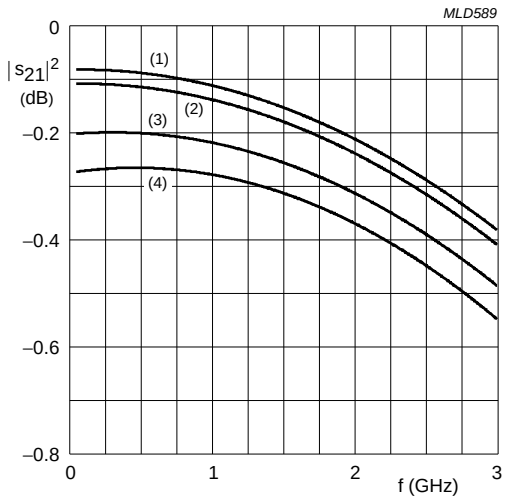

(1) I_F = 100 mA. (3) I_F = 1 mA.
(2) I_F = 10 mA. (4) I_F = 0.5 mA.

Diode inserted in series with a 50 Ω stripline circuit and biased via the analyzer Tee network.
T_{amb} = 25 °C.

Fig.4 Insertion loss ($|s_{21}|^2$) of the diode as a function of frequency; typical values.

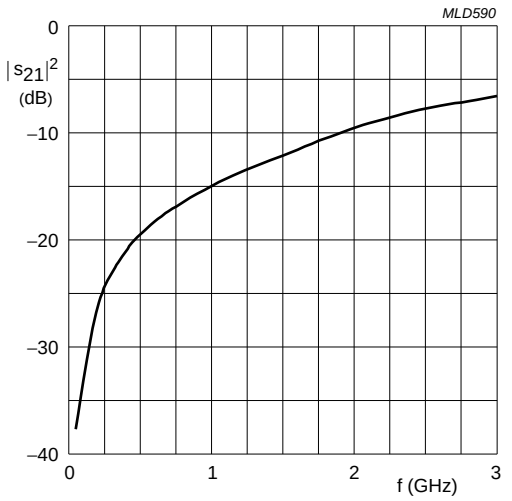

Diode zero biased and inserted in series with a 50 Ω stripline circuit.
T_{amb} = 25 °C.

Fig.5 Isolation ($|s_{21}|^2$) of the diode as a function of frequency; typical values.

PACKAGE OUTLINE

Plastic surface-mounted package; 3 leads **SOT23**

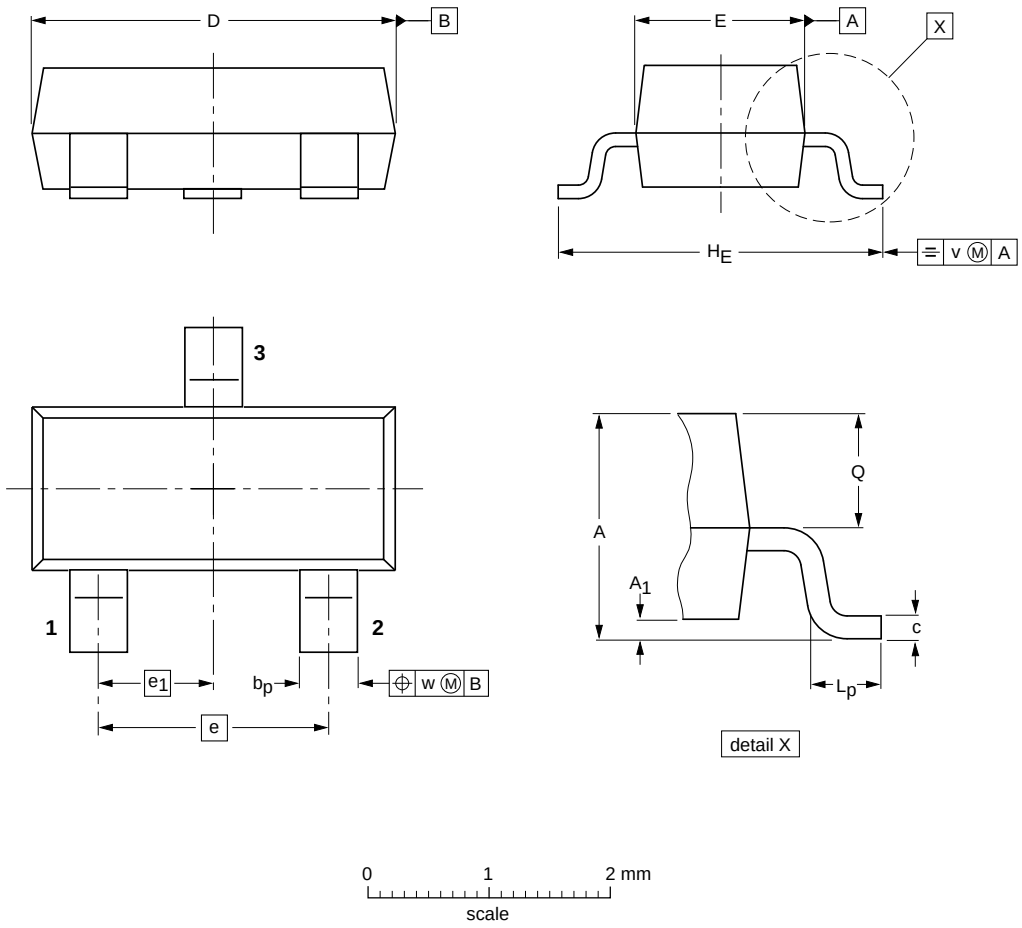

DIMENSIONS (mm are the original dimensions)

UNIT	A	A_1 max.	b_p	c	D	E	e	e_1	H_E	L_p	Q	v	w
mm	1.1 0.9	0.1	0.48 0.38	0.15 0.09	3.0 2.8	1.4 1.2	1.9	0.95	2.5 2.1	0.45 0.15	0.55 0.45	0.2	0.1

OUTLINE VERSION	REFERENCES				EUROPEAN PROJECTION	ISSUE DATE
	IEC	JEDEC	JEITA			
SOT23		TO-236AB				~~04-11-04~~ 06-03-16

DATA SHEET STATUS

DOCUMENT STATUS[1]	PRODUCT STATUS[2]	DEFINITION
Objective data sheet	Development	This document contains data from the objective specification for product development.
Preliminary data sheet	Qualification	This document contains data from the preliminary specification.
Product data sheet	Production	This document contains the product specification.

Notes

1. Please consult the most recently issued document before initiating or completing a design.
2. The product status of device(s) described in this document may have changed since this document was published and may differ in case of multiple devices. The latest product status information is available on the Internet at URL http://www.nxp.com.

DEFINITIONS

Product specification — The information and data provided in a Product data sheet shall define the specification of the product as agreed between NXP Semiconductors and its customer, unless NXP Semiconductors and customer have explicitly agreed otherwise in writing. In no event however, shall an agreement be valid in which the NXP Semiconductors product is deemed to offer functions and qualities beyond those described in the Product data sheet.

DISCLAIMERS

Limited warranty and liability — Information in this document is believed to be accurate and reliable. However, NXP Semiconductors does not give any representations or warranties, expressed or implied, as to the accuracy or completeness of such information and shall have no liability for the consequences of use of such information.

In no event shall NXP Semiconductors be liable for any indirect, incidental, punitive, special or consequential damages (including - without limitation - lost profits, lost savings, business interruption, costs related to the removal or replacement of any products or rework charges) whether or not such damages are based on tort (including negligence), warranty, breach of contract or any other legal theory.

Notwithstanding any damages that customer might incur for any reason whatsoever, NXP Semiconductors' aggregate and cumulative liability towards customer for the products described herein shall be limited in accordance with the *Terms and conditions of commercial sale* of NXP Semiconductors.

Right to make changes — NXP Semiconductors reserves the right to make changes to information published in this document, including without limitation specifications and product descriptions, at any time and without notice. This document supersedes and replaces all information supplied prior to the publication hereof.

Suitability for use — NXP Semiconductors products are not designed, authorized or warranted to be suitable for use in life support, life-critical or safety-critical systems or equipment, nor in applications where failure or malfunction of an NXP Semiconductors product can reasonably be expected to result in personal injury, death or severe property or environmental damage. NXP Semiconductors accepts no liability for inclusion and/or use of NXP Semiconductors products in such equipment or applications and therefore such inclusion and/or use is at the customer's own risk.

Applications — Applications that are described herein for any of these products are for illustrative purposes only. NXP Semiconductors makes no representation or warranty that such applications will be suitable for the specified use without further testing or modification.

Customers are responsible for the design and operation of their applications and products using NXP Semiconductors products, and NXP Semiconductors accepts no liability for any assistance with applications or customer product design. It is customer's sole responsibility to determine whether the NXP Semiconductors product is suitable and fit for the customer's applications and products planned, as well as for the planned application and use of customer's third party customer(s). Customers should provide appropriate design and operating safeguards to minimize the risks associated with their applications and products.

NXP Semiconductors does not accept any liability related to any default, damage, costs or problem which is based on any weakness or default in the customer's applications or products, or the application or use by customer's third party customer(s). Customer is responsible for doing all necessary testing for the customer's applications and products using NXP Semiconductors products in order to avoid a default of the applications and the products or of the application or use by customer's third party customer(s). NXP does not accept any liability in this respect.

Limiting values — Stress above one or more limiting values (as defined in the Absolute Maximum Ratings System of IEC 60134) will cause permanent damage to the device. Limiting values are stress ratings only and (proper) operation of the device at these or any other conditions above those given in the Recommended operating conditions section (if present) or the Characteristics sections of this document is not warranted. Constant or repeated exposure to limiting values will permanently and irreversibly affect the quality and reliability of the device.

Terms and conditions of commercial sale — NXP Semiconductors products are sold subject to the general terms and conditions of commercial sale, as published at http://www.nxp.com/profile/terms, unless otherwise agreed in a valid written individual agreement. In case an individual agreement is concluded only the terms and conditions of the respective agreement shall apply. NXP Semiconductors hereby expressly objects to applying the customer's general terms and conditions with regard to the purchase of NXP Semiconductors products by customer.

No offer to sell or license — Nothing in this document may be interpreted or construed as an offer to sell products that is open for acceptance or the grant, conveyance or implication of any license under any copyrights, patents or other industrial or intellectual property rights.

Export control — This document as well as the item(s) described herein may be subject to export control regulations. Export might require a prior authorization from national authorities.

Quick reference data — The Quick reference data is an extract of the product data given in the Limiting values and Characteristics sections of this document, and as such is not complete, exhaustive or legally binding.

Non-automotive qualified products — Unless this data sheet expressly states that this specific NXP Semiconductors product is automotive qualified, the product is not suitable for automotive use. It is neither qualified nor tested in accordance with automotive testing or application requirements. NXP Semiconductors accepts no liability for inclusion and/or use of non-automotive qualified products in automotive equipment or applications.

In the event that customer uses the product for design-in and use in automotive applications to automotive specifications and standards, customer (a) shall use the product without NXP Semiconductors' warranty of the product for such automotive applications, use and specifications, and (b) whenever customer uses the product for automotive applications beyond NXP Semiconductors' specifications such use shall be solely at customer's own risk, and (c) customer fully indemnifies NXP Semiconductors for any liability, damages or failed product claims resulting from customer design and use of the product for automotive applications beyond NXP Semiconductors' standard warranty and NXP Semiconductors' product specifications.

NXP Semiconductors

provides High Performance Mixed Signal and Standard Product solutions that leverage its leading RF, Analog, Power Management, Interface, Security and Digital Processing expertise

Customer notification

This data sheet was changed to reflect the new company name NXP Semiconductors, including new legal definitions and disclaimers. No changes were made to the technical content, except for package outline drawings which were updated to the latest version.

Contact information

For additional information please visit: **http://www.nxp.com**
For sales offices addresses send e-mail to: **salesaddresses@nxp.com**

© NXP B.V. 2010

All rights are reserved. Reproduction in whole or in part is prohibited without the prior written consent of the copyright owner.

The information presented in this document does not form part of any quotation or contract, is believed to be accurate and reliable and may be changed without notice. No liability will be accepted by the publisher for any consequence of its use. Publication thereof does not convey nor imply any license under patent- or other industrial or intellectual property rights.

Printed in The Netherlands R77/01/pp8 Date of release: 2001 Apr 17